SUBSTITUTION REQUEST

The Construction Specifications Institute
Northwest Region

TO: PAE

PROJECT: OSU Campus Restroom

SPECIFIED ITEM: American Standard Afwall Series

Section No.	Page	Paragraph	Description
224000	3	2.03.A	wall hung vitreous china water closet

PROPOSED SUBSTITUTION:

Sloan St-2459 #2102459

Attached data includes product description, specifications, drawings, photographs, performance and test data adequate for evaluation of request, including identifying applicable portions.

Attached data also includes description of changes to Contract Documents that proposed substitution requires for proper installation.

Undersigned certifies that the following items, unless modified by attachments, are correct:

1. Proposed substitution does not affect dimensions shown on Drawings.
2. Undersigned pays for changes to building design, including engineering design, detailing and construction costs caused by proposed substitution.
3. Proposed substitution has no adverse effect on other trades, construction schedule, or specified warranty requirements.
4. Maintenance and service parts are available locally or are readily obtainable for proposed substitution.

Undersigned further certifies that function, appearance, and quality of proposed substitutions are equivalent or superior to specified item.

Undersigned agrees that, if this page is reproduced, terms and conditions for substitutions found in Bidding Documents apply to this proposed substitution.

Submitted by:

Matthew Files
Name (Print)

Signature

Braley Gray & Associates
Firm Name

2818 E 2nd Street
Address

Vancouver, WA 98661
City, State, Zip

01/04/18
Date

360-693-9900 **360-693-7997**
Telephone Fax

General Contractor (if after award of Contract)

For use by AIE:

X Approved ____ Approved as noted

____ Not Approved ____ Received too late

By Date 1/16/19

Remarks:

Attachments:

Royal Top Spud Wall Hung ADA Compliant Toilet Fixture ST-2459 Universal Closet

► Code Number:
2102459

► Description
Vitreous china wall hung water closet

► Flush Cycle
Model ST-2459 Universal Closet (1.1 to 1.6 gpf/4.2 to 6.0 Lpf)

Flush volume is determined by the flushometer used with fixture

► SPECIFICATIONS
Fixture Specification
- Wall hung vitreous china elongated bowl
- Siphon jet flushing action
- 1 ½" I.P.S. top spud inlet
- 2 1/8" fully glazed trapway diameter
- Mounting hardware, carrier and toilet seat not included
- Integral flushing rim with bed pan lugs
- Water spot area 11-1/4" x 8-1/2"
- ASME A112.19.2/CSA B45.1

Colors/Finishes
- White

Recommended Seats
- Bemis - 1955CT/1955SSCT & 2155CT/2155SSCT
- Church - 295CT/295SSCT & 2155CT/2155SSCT

► Plumbing System Requirements
- Minimum Flowing Pressure: 25 PSI
- Maximum Static Pressure: 80 PSI
- Minimum Flow Rate: 25 GPM

► NOTE
This model meets the requirements for a High Efficiency Toilet when used with a high efficiency flushometer (1.28 gpf/4.8 Lpf or 1.1/1.6 gpf-4.2/6.0 Lpf dual-flush).

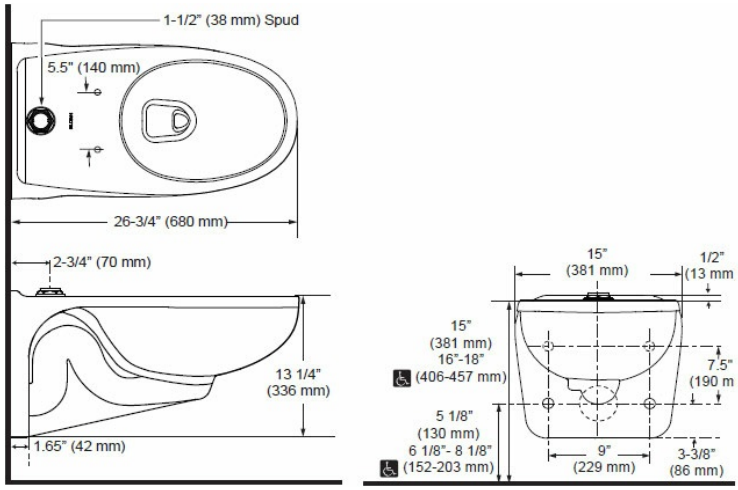

► Product Specification
Elongated water closet shall be made of vitreous china with a 1-1/2" top spud inlet. Bowl shall be ADA compliant when installed at required height of 17"-19" from floor to top of fixture (including seat). Water Closet shall be Sloan Model ST-2459-A.

► Disclaimer
NOTE: All vitreous china dimensions shown in these drawings are nominal and not to scale. Dimensions can vary within the tolerances established in the governing ASME A112.19.2/CSA B45.1 standard. It is important to consider this when planning rough-in and plumbing layouts.

All information contained within this document subject to change without notice.

► Compliance & Certifications
UPC C ®

HIGH-EFFICIENCY TOILET

This space for Architect/Engineer Approval

SLOAN 10500 SEYMOUR AVE. ● FRANKLIN PARK, ● IL. 60131
Ph: 1-800-9-VALVE-9 or 1-847-671-4300 ● Fax: 1-800-447-8329 or 1-847-671-4380 ● http://www.sloan.com