SUBSTITUTION REQUEST

The Construction Specifications Institute
Northwest Region

TO: PAE

PROJECT: OSU Campus Restroom

SPECIFIED ITEM: Zurn Z5755

Section No.	Page	Paragraph	Description
224000	3	2.03.B	wall hung vitreous china urinal

PROPOSED SUBSTITUTION:

Sloan SU-1009 #1101009

Attached data includes product description, specifications, drawings, photographs, performance and test data adequate for evaluation of request, including identifying applicable portions.

Attached data also includes description of changes to Contract Documents that proposed substitution requires for proper installation.

Undersigned certifies that the following items, unless modified by attachments, are correct:

1. Proposed substitution does not affect dimensions shown on Drawings.
2. Undersigned pays for changes to building design, including engineering design, detailing and construction costs caused by proposed substitution.
3. Proposed substitution has no adverse effect on other trades, construction schedule, or specified warranty requirements.
4. Maintenance and service parts are available locally or are readily obtainable for proposed substitution.

Undersigned further certifies that function, appearance, and quality of proposed substitutions are equivalent or superior to specified item.

Undersigned agrees that, if this page is reproduced, terms and conditions for substitutions found in Bidding Documents apply to this proposed substitution.

Submitted by:

Matthew Files
Name (Print)

Signature

Braley Gray & Associates
Firm Name

2818 E 2nd Street
Address

Vancouver, WA 98661
City, State, Zip

01/04/18
Date

360-693-9900 **360-693-7997**
Telephone Fax

General Contractor (if after award of Contract)

For use by AIE:

X Approved ____ Approved as noted

____ Not Approved ____ Received too late

By Date 1/16/19

Remarks:

Attachments:

Sloan Standard Urinal
SU-1009-A

▶ Code Number
1101009

▶ Description
Complete vitreous china top spud urinal.

▶ Flush Cycle
Model SU-1009-A* (0.125 to 0.5 gpf/0.5 to 1.9 Lpf)

Flush volume is determined by the flushometer used with urinal.

▶ SPECIFICATIONS
- Wall hung top spud vitreous china
- Washdown flushing action
- ¾" IPS top spud inlet
- 2" NPT outlet flange
- All mounting hardware included
- Integral flushing rim
- 100% factory flush tested
- Carrier not included

Vandal resistant strainer assembly included

Compliant to the applicable sections of ASME A112.19.2/CSA B45.1

NOTE: Plumbing System Requirements

- Minimum Flowing Pressure: 25 PSI / Minimum Flow Rate: 18 GPM / Maximum Fixture Static Pressure: 80 PSI

*Please note that this model is fully interchangeable with Models SU-1000-A, SU-1002-A & SU-1005-A and matches all dimensional and performance parameters.

Meets the American Disabilities Guidelines and ANSI A117.1 requirements when installed at the proper height requirements for accessibility.

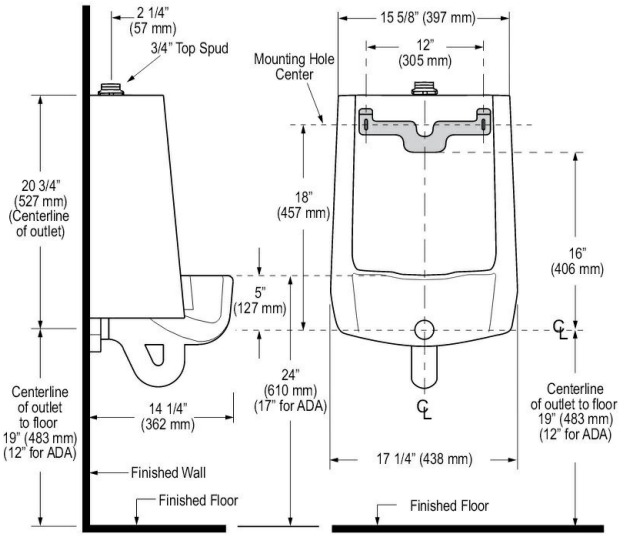

NOTE: All vitreous china dimensions shown in these drawings are nominal and not to scale. Dimensions can vary within the tolerances established in the governing ASME A112.19.2/CSA B45.1 standard. It is important to consider this when planning rough-in and plumbing layouts.

▶ Product Specification
Washdown urinal shall be made of vitreous china with a ¾" top spud. Urinal shall have a 2" NPT outlet flange. Urinal shall include a removable strainer, inlet spud and hanger. Urinal shall shall be Sloan Model SU-1009-A.

▶ Compliance & Certifications

This space for Architect/Engineer Approval

SLOAN 10500 SEYMOUR AVE. ● FRANKLIN PARK, ● IL. 60131
Ph: 1-800-9-VALVE-9 or 1-847-671-4300 ● Fax: 1-800-447-8329 or 1-847-671-4380 ● http://www.sloan.com