SUBSTITUTION REQUEST

The Construction Specifications Institute
Northwest Region

TO: PAE

PROJECT: OSU Campus Restroom

SPECIFIED ITEM: American Standard Lucerne Series

Section No.	Page	Paragraph	Description
224000	3	2.03.B	wall hung vitreous china lavatory w/ 4" centers

PROPOSED SUBSTITUTION:

Sloan SS-3003 #3873003

Attached data includes product description, specifications, drawings, photographs, performance and test data adequate for evaluation of request, including identifying applicable portions.

Attached data also includes description of changes to Contract Documents that proposed substitution requires for proper installation.

Undersigned certifies that the following items, unless modified by attachments, are correct:

1. Proposed substitution does not affect dimensions shown on Drawings.
2. Undersigned pays for changes to building design, including engineering design, detailing and construction costs caused by proposed substitution.
3. Proposed substitution has no adverse effect on other trades, construction schedule, or specified warranty requirements.
4. Maintenance and service parts are available locally or are readily obtainable for proposed substitution.

Undersigned further certifies that function, appearance, and quality of proposed substitutions are equivalent or superior to specified item.

Undersigned agrees that, if this page is reproduced, terms and conditions for substitutions found in Bidding Documents apply to this proposed substitution.

Submitted by:

Matthew Files
Name (Print)

Signature

Braley Gray & Associates
Firm Name

2818 E 2nd Street
Address

Vancouver, WA 98661
City, State, Zip

01/04/18
Date

360-693-9900 **360-693-7997**
Telephone Fax

General Contractor (if after award of Contract)

For use by AIE:

X Approved ____ Approved as noted

____ Not Approved ____ Received too late

By Date 1/16/19

Remarks:

Attachments:

Sloan Lavatory Sinks
SS-3003 Series 4" Centerset

▶ Code Number
3873003

▶ Description
Vitreous china wall mounted lavatory with backsplash

▶ Lavatory
- White vitreous china
- Front Overflow
- 4" (102 mm) Centerset
- Wall mount
- Hanging hardware included
- Backsplash
- 20 3/4" (527 mm) x 18 1/4" (464 mm)
- Carrier not included

▶ SPECIFICATIONS

▶ Product Specification
Sink shall be made of vitreous china. Sink shall be wall mounted. Sink shall have an overflow. Sink shall be 4" centerset. Sink shall be Sloan Model SS-3003.

▶ ROUGH-IN

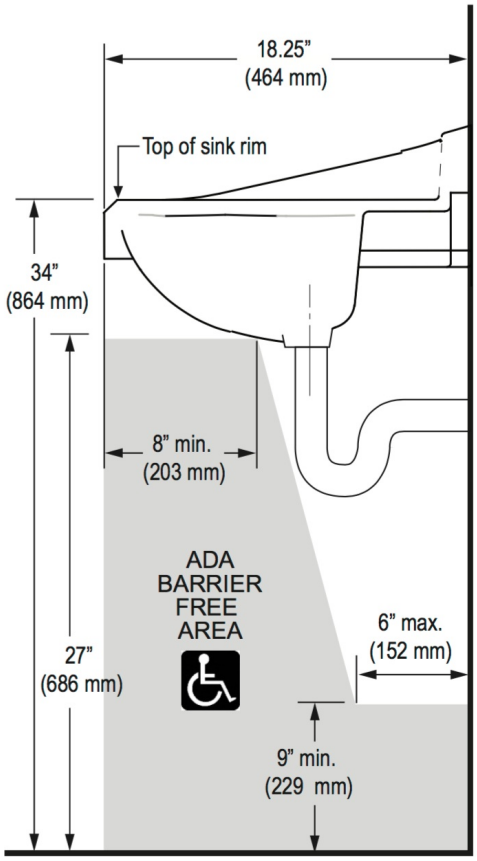

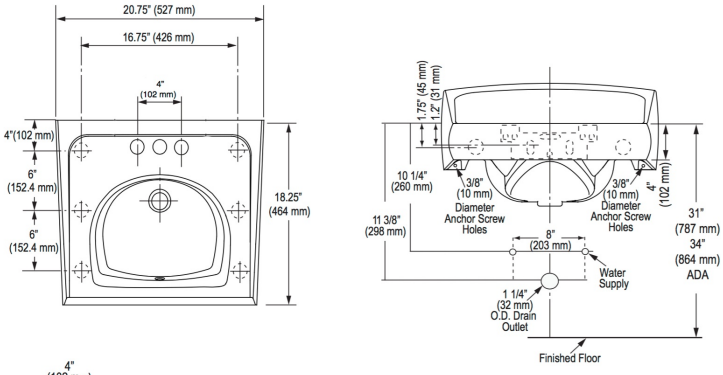

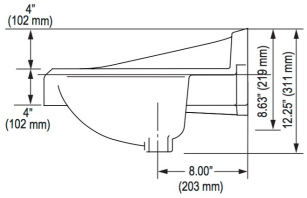

▶ Disclaimer
NOTE: All vitreous china dimensions shown in these drawings are nominal and not to scale. Dimensions can vary within the tolerances established in the governing ASME A112.19.2/CSA B45.1 standard. It is important to consider this when planning rough-in and plumbing layouts.

All information contained within this document subject to change without notice.

▶ Compliance & Certifications

This space for Architect/Engineer Approval

SLOAN 10500 SEYMOUR AVE. ● FRANKLIN PARK, ● IL. 60131
Ph: 1-800-9-VALVE-9 or 1-847-671-4300 ● Fax: 1-800-447-8329 or 1-847-671-4380 ● http://www.sloan.com