HARDWARE GROUPS
HARDWARE GROUPS
1. Refer Section 087100 for other hardware requirements.
2. Low-voltage access and security systems must comply with Owners existing system. Supply hardware in the following groups.

Group HW-01
All offices and conference rooms:
Doors: 301A, 302A, 304A
Butts: Stanley F179 4.5 x 4.5
Lockset: Schlage ND 53 RHO
Wallstop: Ives WS407 CCV

Group HW-02
Doors: 306A
Butts: Stanley F179 4.5 x 4.5
Lockset: Electronic stand-alone lock by SOU (same prep as Schlage ND 53)
Closer: LCN 4040 XP
Wallstop: Ives WS407 CCV

Group HW-03
Base Bid
Keep existing hardware. Modify Door 303B to include powered open/closer activated with ADA press switch. Electric strike or lock, fail-safe: Verify latching compatibility with new ADA hardware, provide new hardware if existing hardware is not compatible.

Alternate 01
South entry doors (if replaced with new HM doors/frames)
Doors: 303A, 303B
Butts: Stanley F179 4.5 x 4.5
Exit Devices: Von Duprin CD 99NL, CD 99DT
Cylinders: Medeco (furnished by SOU)
Closers: LCN 4040 XP SCUSH
Removable Mullion: VonDuprin 4954 (one door can be fixed mullion)
Door Bottoms: Pemko 211DV
Kickplates: Glynn-Johnson 10"
Thresholds: Pemko 272D
Gaskets: Steelcraft PS074
Card Reader: reuse existing on east door only

Group HW-04
Hardware groups to be supplied by Contractor:
Doors: 305A, 307A, 308A

Note: SOU standard brushed stainless finish for all hardware (no bronze).

DOOR SCHEDULE

SYM		DOOR SIZE	DOOR MAT.	DOOR FIN.	DOOR TYPE	ACCESS CONTROL	FRAME MAT.	FRAME FIN.	FRAME TYPE	FIRE RATING	HDWR GROUP	DETAILS JAMB	DETAILS HEAD	SIGNAGE	REMARKS
301	A	3'-0" X 7'-0" X 1 3/4"	WD	P	A		HM	P	A		1	10/A12.2	10/A12.2	1/A6.1	
302	A	3'-0" X 7'-0" X 1 3/4"	WD	P	A		HM	P	A		1	10/A12.2	10/A12.2	1/A6.1	
303	A	3'-0" X 7'-0" X 1 3/4"	HM	P	A	-	-	-	-	-	3	-	-	-	ALT 01
303	B	3'-0" X 7'-0" X 1 3/4"	HM	P	A	ADA	-	-	-	-	3	-	-	1/A6.1	ALT 01; ADA PUSH BUTTON IS W/ BASE BID
304	A	3'-0" X 7'-0" X 1 3/4"	WD	P	A		HM	P	A		1	10/A12.2	10/A12.2	1/A6.1	
305	A	3'-0" X 7'-0" X 1 3/4"	WD	P	A		HM	P	A		4	10/A12.2	10/A12.2	1/A6.1	
306	A	3'-0" X 7'-0" X 1 3/4"	WD	P	A	KF	HM	P	A	-	2	-	-	-	FIELD VERIFY
307	A	3'-0" X 7'-0" X 1 3/4"	WD	P	A		HM	P	A		1	10/A12.2	10/A12.2	1/A6.1	
308	A	3'-0" X 7'-0" X 1 3/4"	WD	P	A		HM	P	A		1	10/A12.2	10/A12.2	1/A6.1	

ABBREVIATIONS	
AL	ALUMINUM
EX	EXISTING
FF	FACTORY FINISH
HM	HOLLOW METAL
ITG	INSULATED TEMPERED GLASS
NR	NON RATED
P	PAINT
PLAM	PLASTIC LAMINATE
PVDF	POLYVINYLIDENE FLUORIDE
SC	SOLID CORE WOOD
SS	STAINLESS STEEL
STL	STEEL
STN	STAIN
TG	TEMPERED GLASS
WD	WOOD

ACCESS CONTROL	
ADA	ADA PUSH BUTTON
CRM	CARD READER-MAG STRIP
CRMK	CARD READER-MAG STRIP+KP
CRP	CARD READER -PROXIMITY
ELD	EMERGENCY LOCK DOWN DOOR
ES	ELECTRIC STRIKE/LOCK
KF	KEY FOB
ML	MAGLOCK W/ EXIT SENSOR
DPS	DOOR POSITION SENSOR
RA	REMOTE ACTIVATION

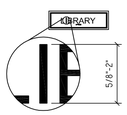

FIG. 703.3.5
CHARACTER HEIGHT

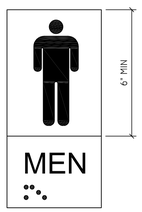

FIG. 703.5
PICTOGRAM FIELD

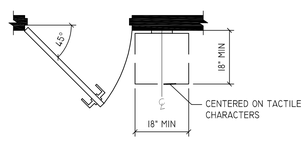

FIG. 703.3.11 ICC/ANSI A117.1-2003
LOCATION OF TACTILE SIGNS AT DOORS

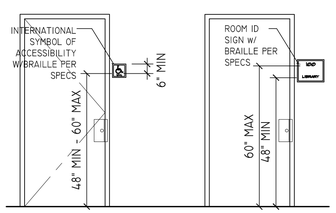

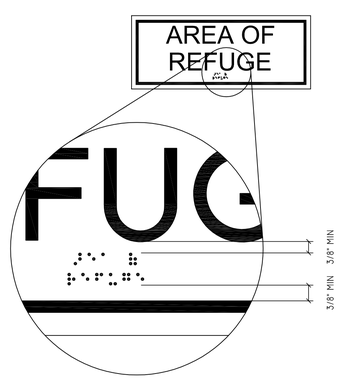

FIG. 703.4.4
POSITION OF BRAILLE

NOTES:
1. ATTACH SIGN USING (4) FLATHEAD WOOD SCREWS COUNTERSUNK & ADHESIVE @ LATCH SIDE OF DOOR.
2. LETTER STYLE TO BE SAN-SERIF UPPERCASE ACCOMPANIED w/ GRADE 2 BRAILLE.
3. WHERE THERE IS NO WALL SPACE ON THE LATCH SIDE, SIGN SHALL BE PLACED ON NEAREST ADJACENT WALL.
4. REFER TO SPECIFICATIONS FOR ADDIONAL REQUIREMENTS.

1 DOOR SIGNAGE
SCALE:

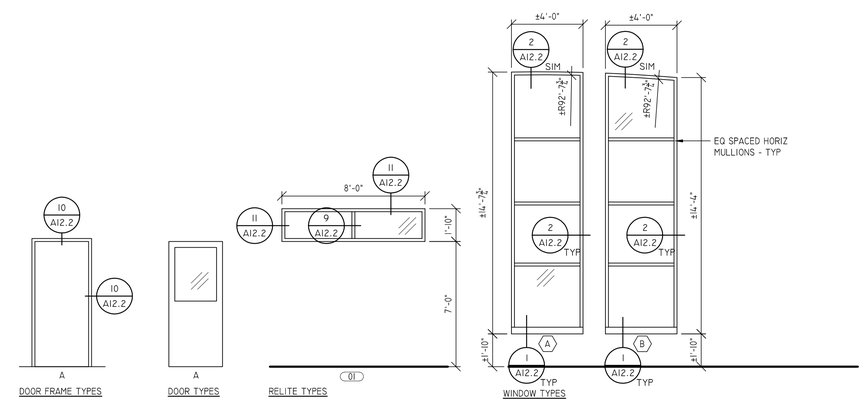

NOTE: FIELD VERIFY WINDOW DIMENSIONS

FINISH SCHEDULE

MARK	ROOM NAME	FLOOR MAT.	FLOOR FIN.	BASE MAT.	BASE FIN.	NORTH WALL MAT.	NORTH WALL FIN.	EAST WALL MAT.	EAST WALL FIN.	SOUTH WALL MAT.	SOUTH WALL FIN.	WEST WALL MAT.	WEST WALL FIN.	CEILING MAT.	CEILING FIN.	CEILING HEIGHT	REMARKS
301	CONFERENCE	CPT	FF	RB	FF	GB	P	GB	P	GB	P	GB	P	ACT/ACT-2	FF/FF	9'-0" / CURVED	SEE A5.2 & A11.1
302	OFFICE	CPT	FF	RB	FF	GB	P	GB	P	GB	P	GB	P	ACT	FF	9'-0"	
303	RECEPTION	CPT	FF	RB	FF	-	-	GB	P	GB	P	GB	P	ACT	FF	17'-0"	SEE A5.1 & A11.1
304	OFFICE	CPT	FF	RB	FF	GB	P	GB	P	GB	P	GB	P	ACT	FF	9'-0"	
305	BREAK ROOM	CPT	FF	RB	FF	GB	P	GB	P	GB	P	GB	P	ACT/ACT-2	FF/FF	9'-0" / CURVED	SEE A5.2 & A11.1
306	OPEN OFFICE	CPT	FF	RB	FF	GB	P	GB	P	GB	P	GB	P	ACT/ACT-2/GB	FF/FF/P	VARIES	SEE A5.1 & A11.1
307	MULTI-PURPOSE	CPT	FF	RB	FF	GB	P	GB	P	GB	P	GB	P	ACT/ACT-2	FF/FF	9'-0" / CURVED	SEE A5.1 & A11.1
308	MULTI-PURPOSE	CPT	FF	RB	FF	GB	P	GB	P	GB	P	GB	P	ACT/ACT-2	FF/FF	9'-0" / CURVED	SEE A5.1 & A11.1
309	VESTIBULE	-	-	-	-	-	P	-	P	-	P	-	P	-	-	-	DOORS & FRAMES TO BE PAINT
310	OFFICE	-	-	-	-	-	P	-	P	-	P	-	P	-	-	-	DOORS & FRAMES TO BE PAINT
311	CORRIDOR	-	-	-	-	-	P	-	P	-	P	-	P	-	-	-	DOORS & FRAMES TO BE PAINT
312	WOMEN	-	-	-	-	-	P	-	P	-	P	-	P	-	-	-	DOORS & FRAMES TO BE PAINT
313	MEN	-	-	-	-	-	P	-	P	-	P	-	P	-	-	-	DOORS & FRAMES TO BE PAINT
314	VESTIBULE	-	-	-	-	-	P	-	P	-	P	-	P	-	-	-	DOORS & FRAMES TO BE PAINT

ABBREVIATIONS	
ACT	2'x2' SUSPENDED ACOUSTICAL CEILING TILE
ACT-2	12"x12" ACOUSTICAL CEILING TILE
ALSF	ALUMINUM STORE FRONT GLAZING SYSTEM
CMU	CONCRETE MASONRY UNIT
CONC	CONCRETE
CPT-1	CARPET
CT	CERAMIC TILE
EM	ENTRY MATTING/ GRATE SYSTEM
FF	FACTORY FINISH
FRP	FIBERGLASS REINF. PLASTIC PANEL
GB	GYPSUM WALLBOARD
GL	GLAZED
P	PAINT
PLYWD	PLYWOOD
PT	PORCELAIN TILE
RB	RUBBER BASE
RSF	RESILIENT SHEET FLOORING
S	STAIN
SV	HOMOGENEOUS SHEET VINYL
SVSB	SHEET VINYL SELF BASE
SVSSB	SHEET SAFETY VINYL SELF BASE
TB	TILE BASE
WD	WOOD

ORW
OGDEN ROEMER WILKERSON
ARCHITECTURE
WWW.ORWARCHITECTURE.COM
2950 EAST BARNETT ROAD
MEDFORD OR 97504
P 541.779.5237
F 541.772.8472

REGISTERED ARCHITECT
JAMES C. ROEMER
4066
Jim Roemer
o=ORW Architecture, ou, email=jim@orwarc h.com, c=US
MEDFORD, OREGON
STATE OF OREGON

SOUTHERN OREGON UNIVERSITY
BRITT HALL THIRD FLOOR CLASSROOM RENOVATION
ASHLAND, OREGON

SCHEDULES

PROJECT	1420-02
DATE	06/03/14

NO.	DESCRIPTION	DATE

A6.1

© 2013 Ogden Roemer Wilkerson Architecture. This document, and the ideas and designs incorporated herein, as an instrument of professional service, shall remain the property of Ogden Roemer Wilkerson Architecture, and shall not be reproduced, published or used, in whole or in part, for any other project or purpose without the express written authorization of Ogden Roemer Wilkerson Architecture

\\ORWA-FILE01\JOBS\1420-02_SOU BRITT HALL\DWG\1420-02_DS.DWG