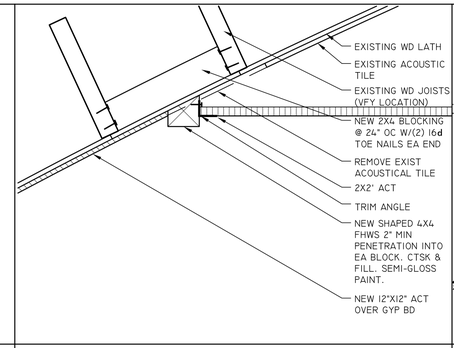

16 CEILING DETAIL
SCALE: 1 1/2"=1'-0"

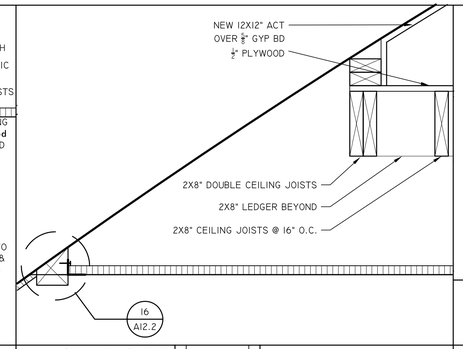

12 CEILING DETAIL
SCALE: 1 1/2"=1'-0"

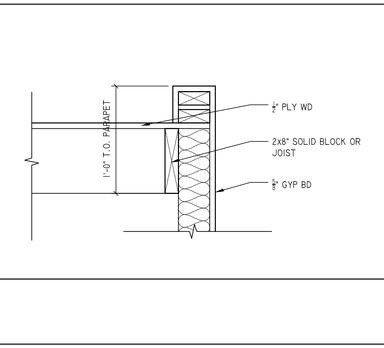

8 BEARING INT. WALL @ JOISTS
SCALE: 1-1/2"=1'-0"

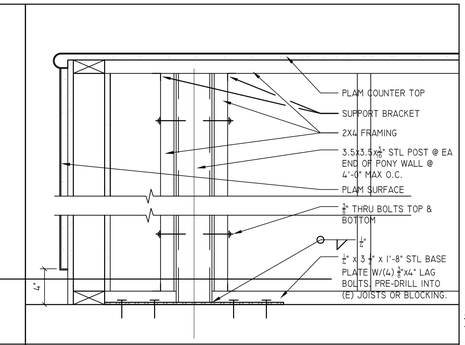

4 PONY WALL POST @ COUNTER
SCALE: 1-1/2"=1'-0"

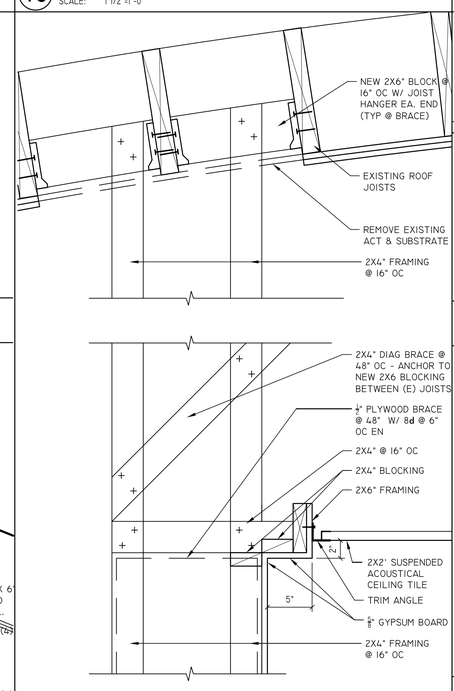

13 CEILING DETAIL
SCALE: 1 1/2"=1'-0"

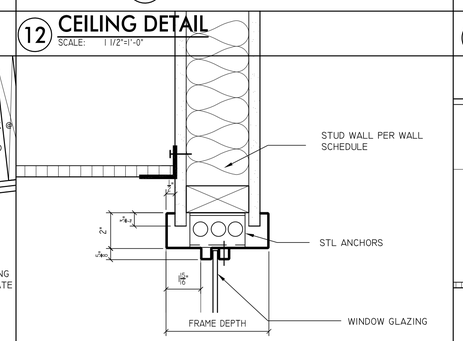

11 INT. H.M. WINDOW HEAD (JAMB SIM)
SCALE: 3"=1'-0"

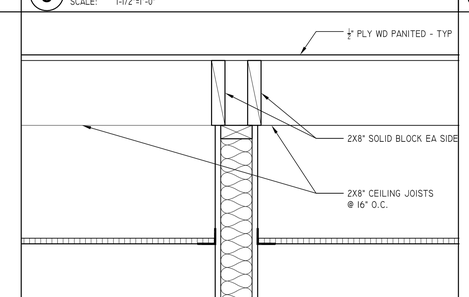

7 PARTITION @ CEILING JOISTS
SCALE: 1-1/2"=1'-0"

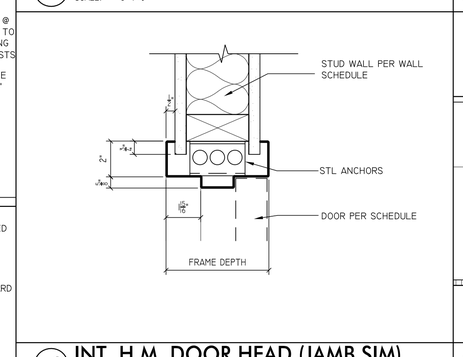

10 INT. H.M. DOOR HEAD (JAMB SIM)
SCALE: 3"=1'-0"

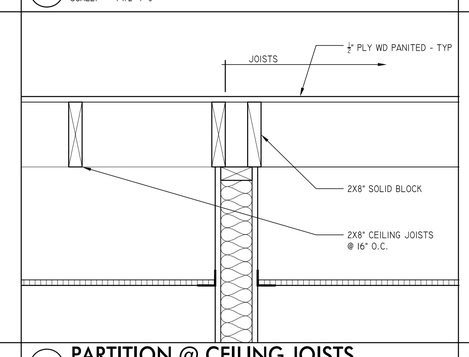

6 PARTITION @ CEILING JOISTS
SCALE: 1-1/2"=1'-0"

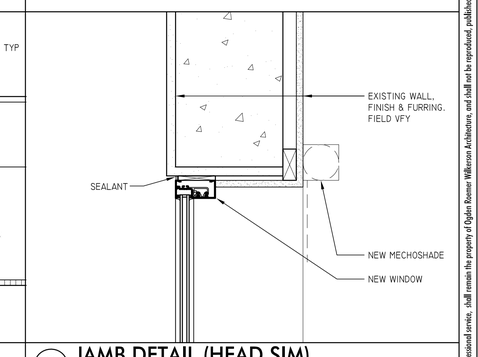

2 JAMB DETAIL (HEAD SIM)
SCALE: 1-1/2"=1'-0"

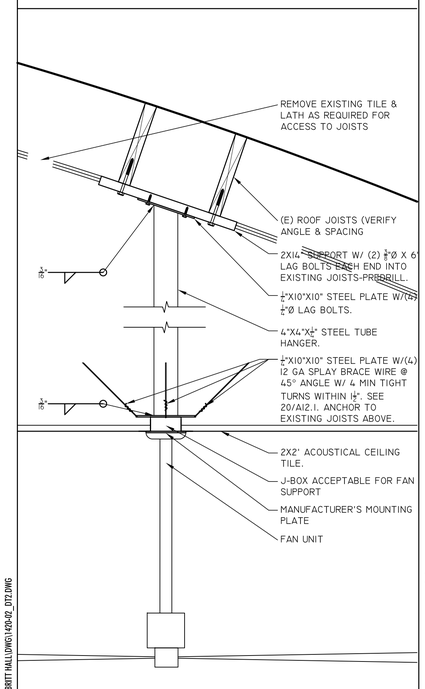

17 CEILING FAN MOUNT DETAIL
SCALE: 1"=1'-0"

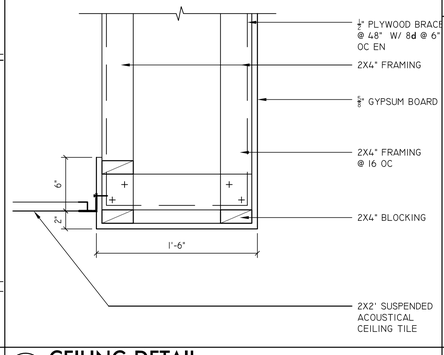

9 INT H.M. WINDOW VERTICAL MULLION
SCALE: 1-1/2"=1'-0"

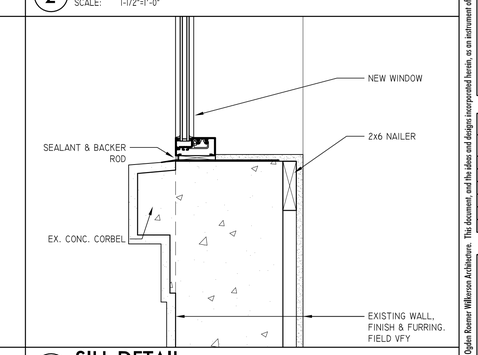

1 SILL DETAIL
SCALE: 1-1/2"=1'-0"

ORW
OGDEN ROEMER WILKERSON ARCHITECTURE
WWW.ORWARCHITECTURE.COM
2950 EAST BARNETT ROAD
MEDFORD OR 97504
P 541.779.5237
F 541.772.8472

REGISTERED ARCHITECT
JAMES C. ROEMER
4066
MEDFORD, OREGON
STATE OF OREGON

SOUTHERN OREGON UNIVERSITY
BRITT HALL THIRD FLOOR CLASSROOM RENOVATION
ASHLAND, OREGON

DETAILS

PROJECT	1420-02
DATE	06/03/14

No.	Description	Date

A12.2

© 2013 Ogden Roemer Wilkerson Architecture. This document, and the ideas and designs incorporated herein, as an instrument of professional service, shall remain the property of Ogden Roemer Wilkerson Architecture, and shall not be reproduced, published or used, in whole or in part, for any other project or purpose without the express written authorization of Ogden Roemer Wilkerson Architecture

J:\1420-02_SOU BRITT HALL\DWG\1420-02_DT2.DWG