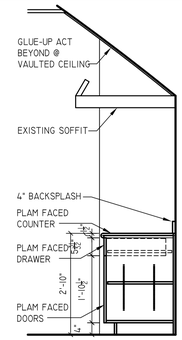

4 KITCHENETTE DETAIL
SCALE: 1/2"=1'-0"

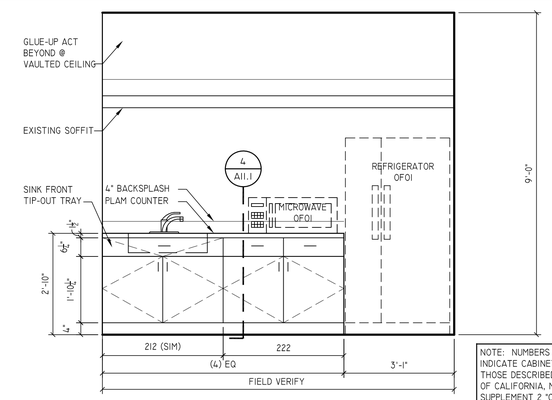

3 KITCHENETTE DETAIL
SCALE: 1/2"=1'-0"

NOTE: NUMBERS AT CASEWORK LOCATIONS INDICATE CABINET STYLE IN ACCORDANCE WITH THOSE DESCRIBED BY THE WOODWORK INSTITUTE OF CALIFORNIA, MANUAL OF MILLWORK, SUPPLEMENT 2 "CASEWORK DESIGN SERIES". CABINET DEPTHS ARE FROM FACE OF DOOR TO BACK OF CABINET BACK. UNLESS SHOWN OTHERWISE, BASE CABINETS ARE 24 INCHES DEEP. WALL AND TALL CABINETS ARE 12 INCHES DEEP.

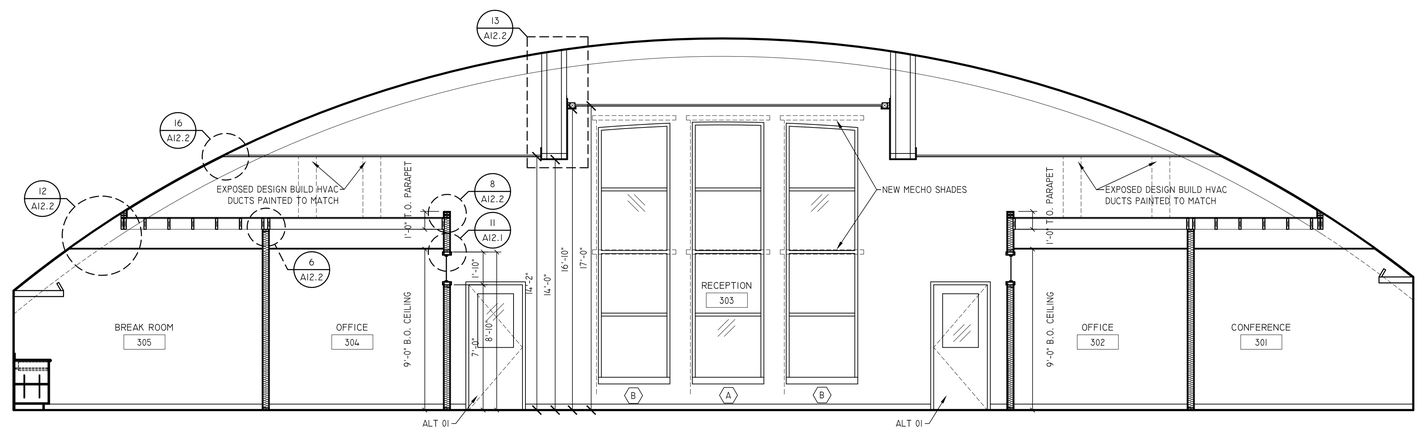

2 SECTION
SCALE: 1/4"=1'-0"

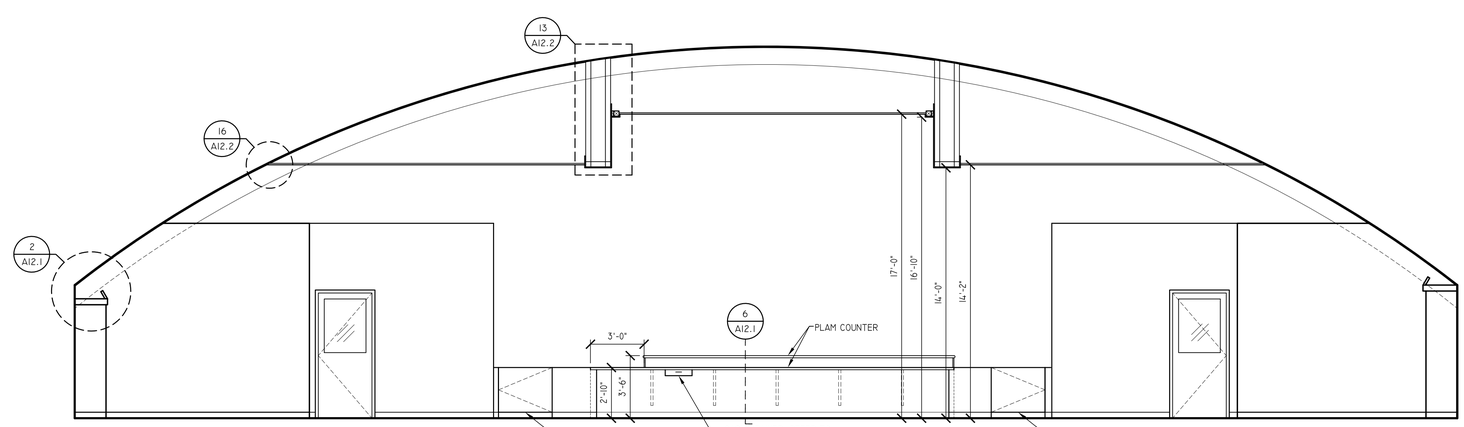

1 ELEVATION
SCALE: 1/4"=1'-0"

J:\1420-02_SOU BRITT HALL\DWGS\1420-02_IE1.DWG

ORW
OGDEN ROEMER WILKERSON
ARCHITECTURE
WWW.ORWARCHITECTURE.COM
2950 EAST BARNETT ROAD
MEDFORD OR 97504
P 541.779.5237
F 541.772.8472

REGISTERED ARCHITECT
JAMES C. ROEMER
4066
MEDFORD, OREGON
STATE OF OREGON

SOUTHERN OREGON UNIVERSITY
BRITT HALL THIRD FLOOR CLASSROOM RENOVATION
ASHLAND, OREGON

INTERIOR ELEVATIONS & DETAILS

PROJECT	1420-02
DATE	06/03/14

No.	Description	Date

A11.1

© 2013 Ogden Roemer Wilkerson Architecture. This document, and the ideas and designs incorporated herein, as an instrument of professional service, shall remain the property of Ogden Roemer Wilkerson Architecture, and shall not be reproduced, published or used, in whole or in part, for any other project or purpose without the express written authorization of Ogden Roemer Wilkerson Architecture