1.0" VOID POST
MATERIAL: MILD STEEL

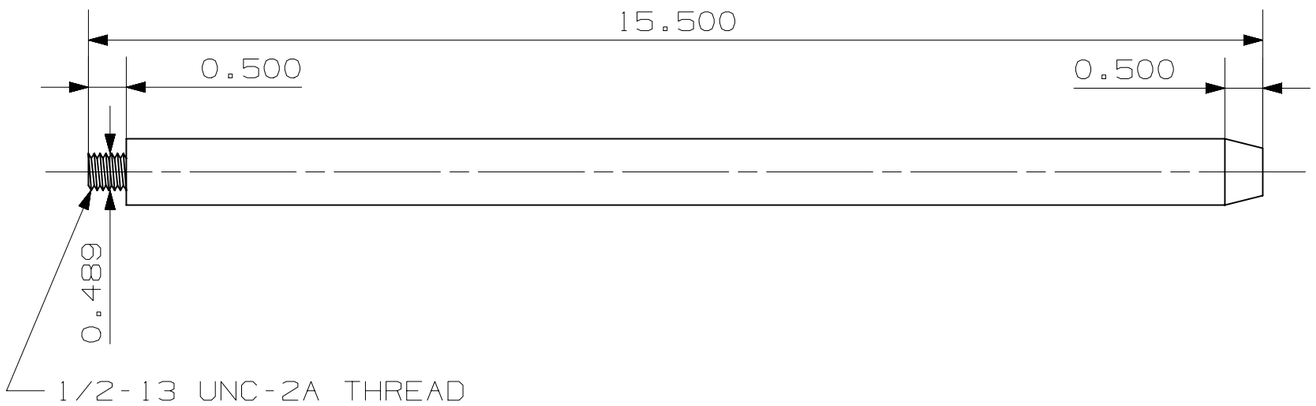

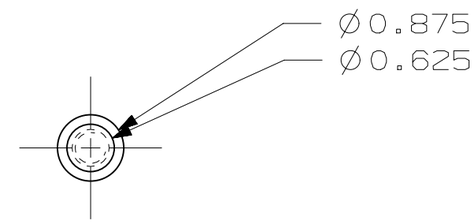

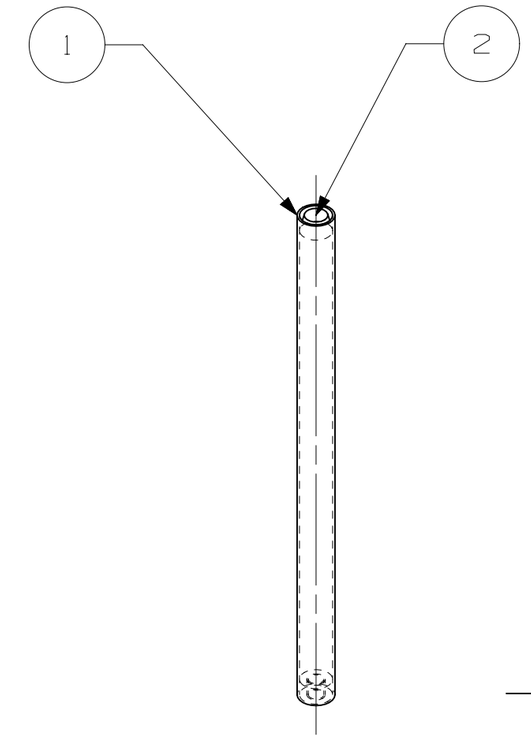

SCALE 1:4

1.0" VOID SLEEVE
MATERIAL: LLDPE

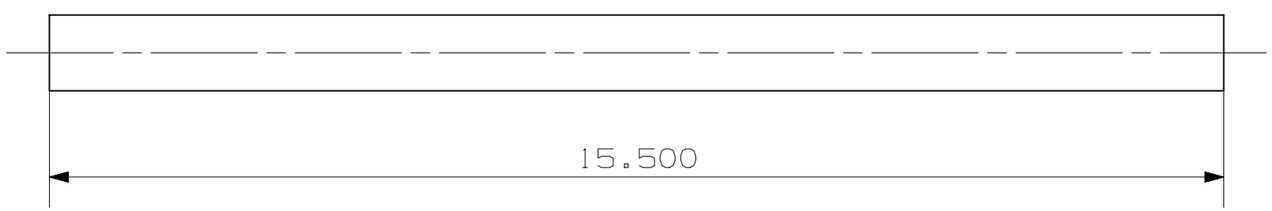

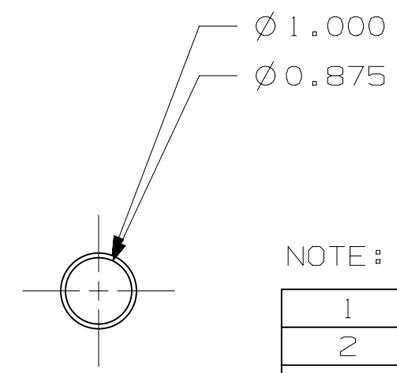

NOTE: 186 ASSEMBLIES NEEDED

PC NO	PART NAME	QTY
1	1000_SLEEVE	1
2	875_POST	1

ALL DIMENSIONS IN INCHES
TOLERANCES: ±0.005"

Oregon State UNIVERSITY

HIGH TEMPERATURE TEST FACILITY
OREGON STATE UNIVERSITY
NUCLEAR ENGINEERING DEPARTMENT
CORVALLIS, OR 97331

DATE	2/17/2012
DRAWN BY	CADELL
REVIEWED BY	J
APPROVED BY	W
MATERIAL	ASSM

TITLE
1.0" VOID ASSEMBLY

SIZE	DRG NO.	REV
B	CB_Mold_1000_Void_dwg	B

SCALE 1:2 | SHEET 1 OF 1