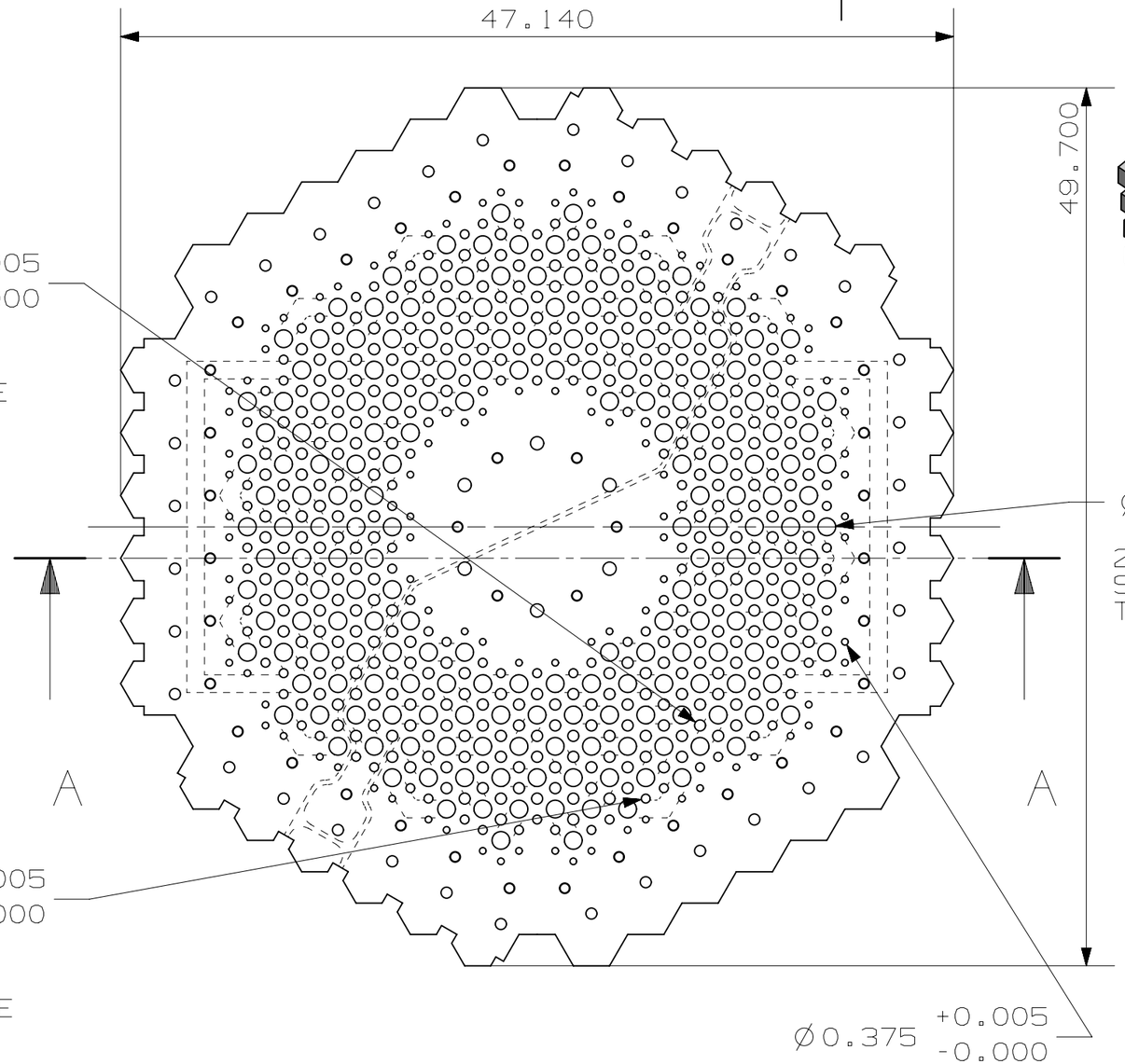


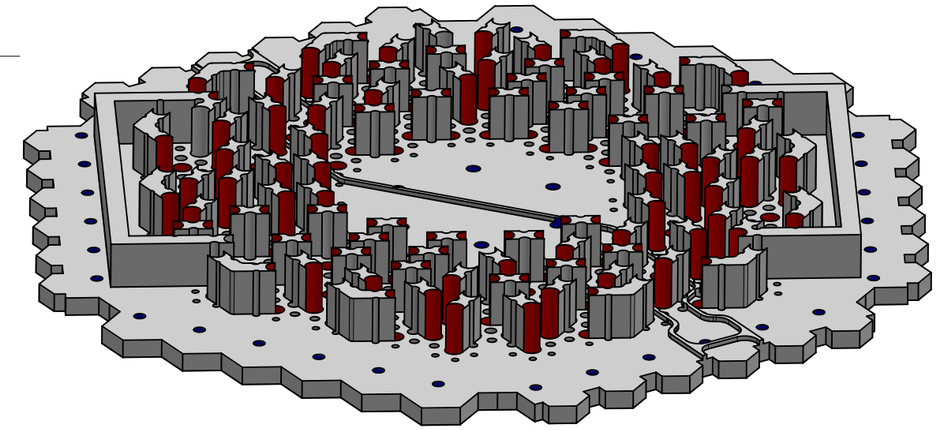

ALL DIMENSIONS IN INCHES
UNLESS NOTED, TOLERANCES: ±0.005"
±0.1°

REMOVE ALL BURRS
BREAK ALL EDGES 0.01" MAX

FOR 3D CAD FILES OF PART, CONTACT:
BRIAN WOODS- WOODSB@ENGR.ORST.EDU

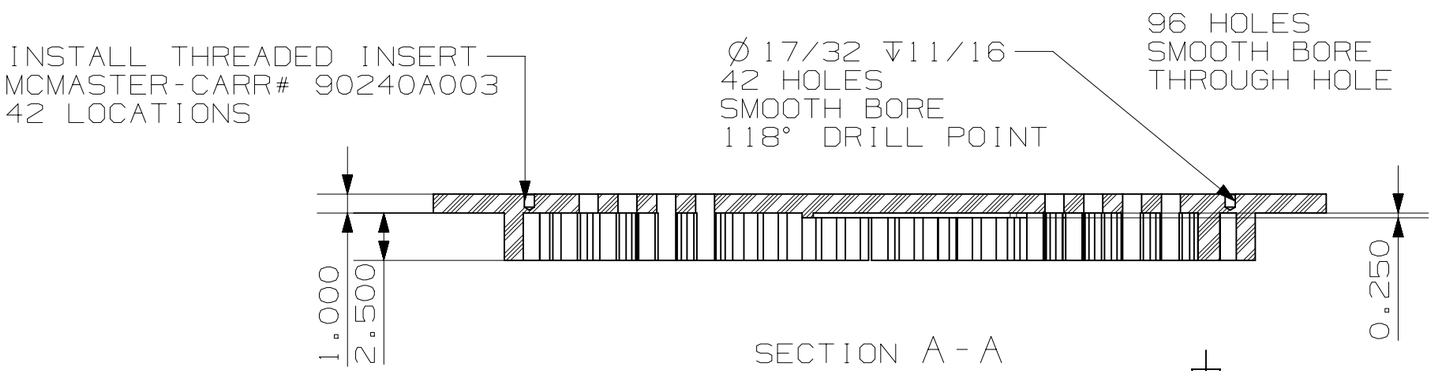


| | | |
|---|---|---|
| **Oregon State UNIVERSITY** | | HIGH TEMPERATURE TEST FACILITY<br>OREGON STATE UNIVERSITY<br>NUCLEAR ENGINEERING DEPARTMENT<br>CORVALLIS, OR 97331 |
| DATE | 02/17/2012 | TITLE<br>CB MOLD- 415202 TOP |
| DRAWN BY | CADELL | |
| REVIEWED BY | J | |
| APPROVED BY | W | SIZE B · DRG NO. CB_Mold_415202_Top_Dwg · REV B |
| MATERIAL | UHMW | SCALE 1:8 · SHEET 1 OF 1 |