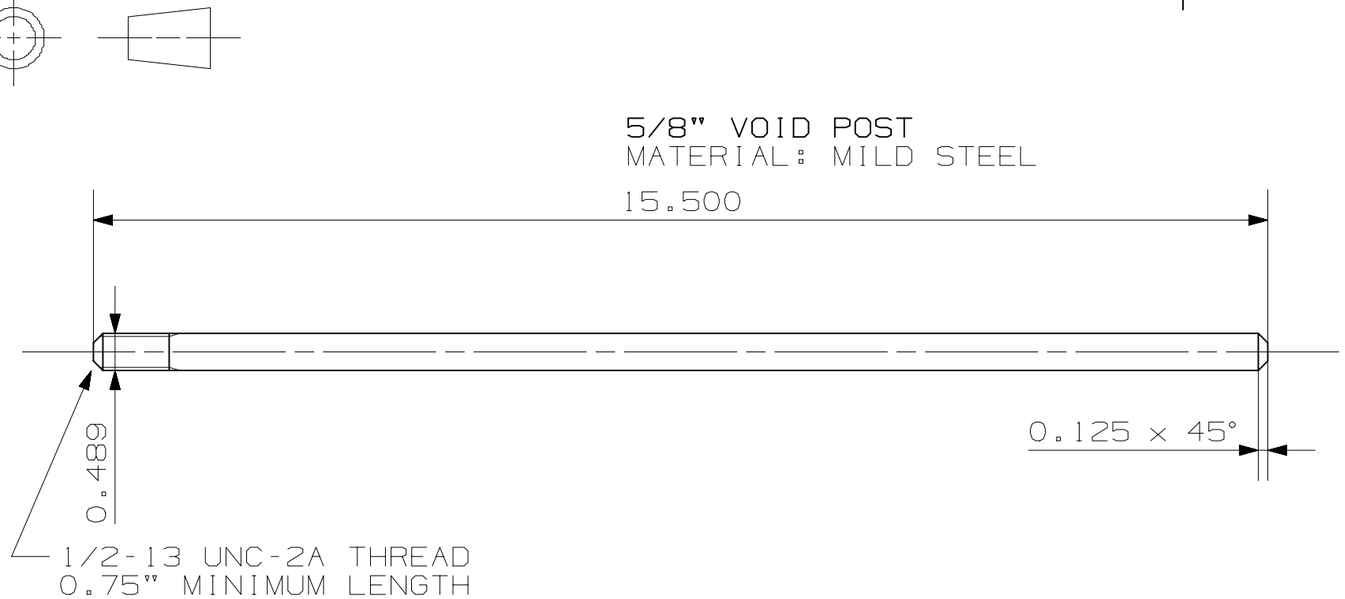

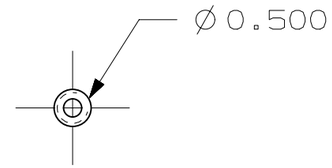

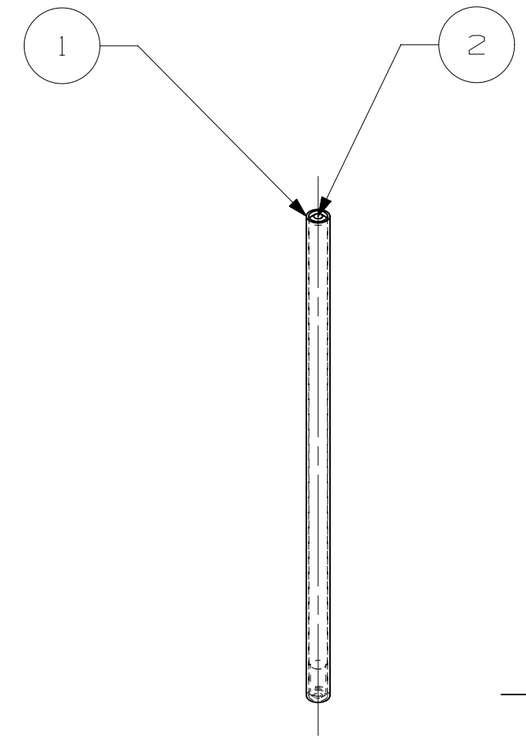

SCALE 1:4

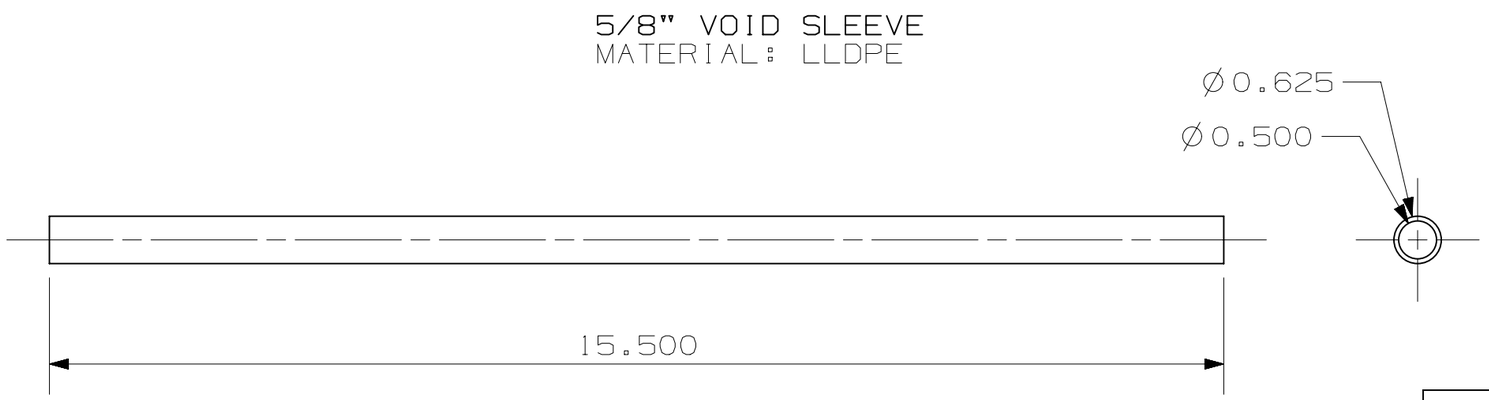

NOTE: 360 ASSEMBLIES NEEDED

PC NO	PART NAME	QTY
1	625_SLEEVE	1
2	500_POST	1

ALL DIMENSIONS IN INCHES
TOLERANCES: ±0.005"

Oregon State UNIVERSITY

HIGH TEMPERATURE TEST FACILITY
OREGON STATE UNIVERSITY
NUCLEAR ENGINEERING DEPARTMENT
CORVALLIS, OR 97331

DATE	2/17/2012
DRAWN BY	CADELL
REVIEWED BY	J
APPROVED BY	W
MATERIAL	ASSM

TITLE
5/8" VOID ASSEMBLY

SIZE	DRG NO.	REV
B	CB_Mold_625_Void_dwg	B

SCALE 1:2 | SHEET 1 OF 1