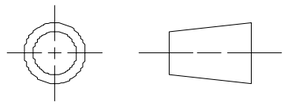

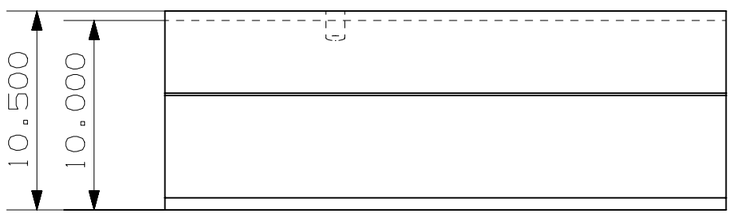

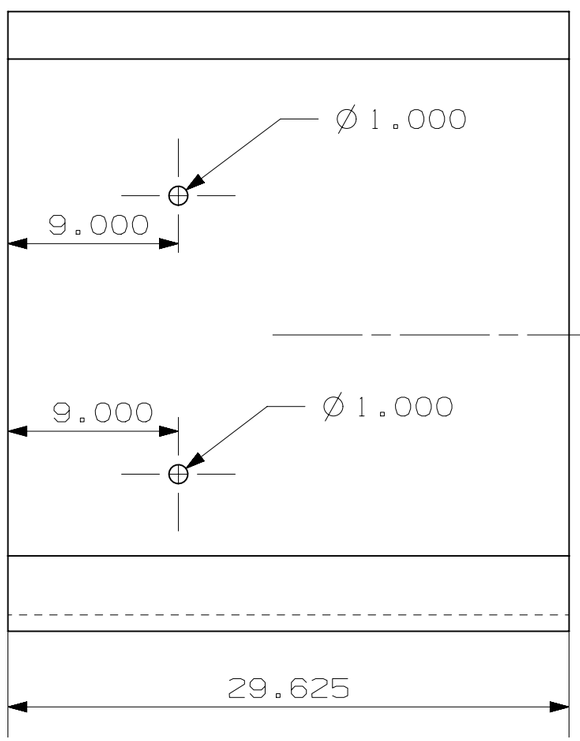

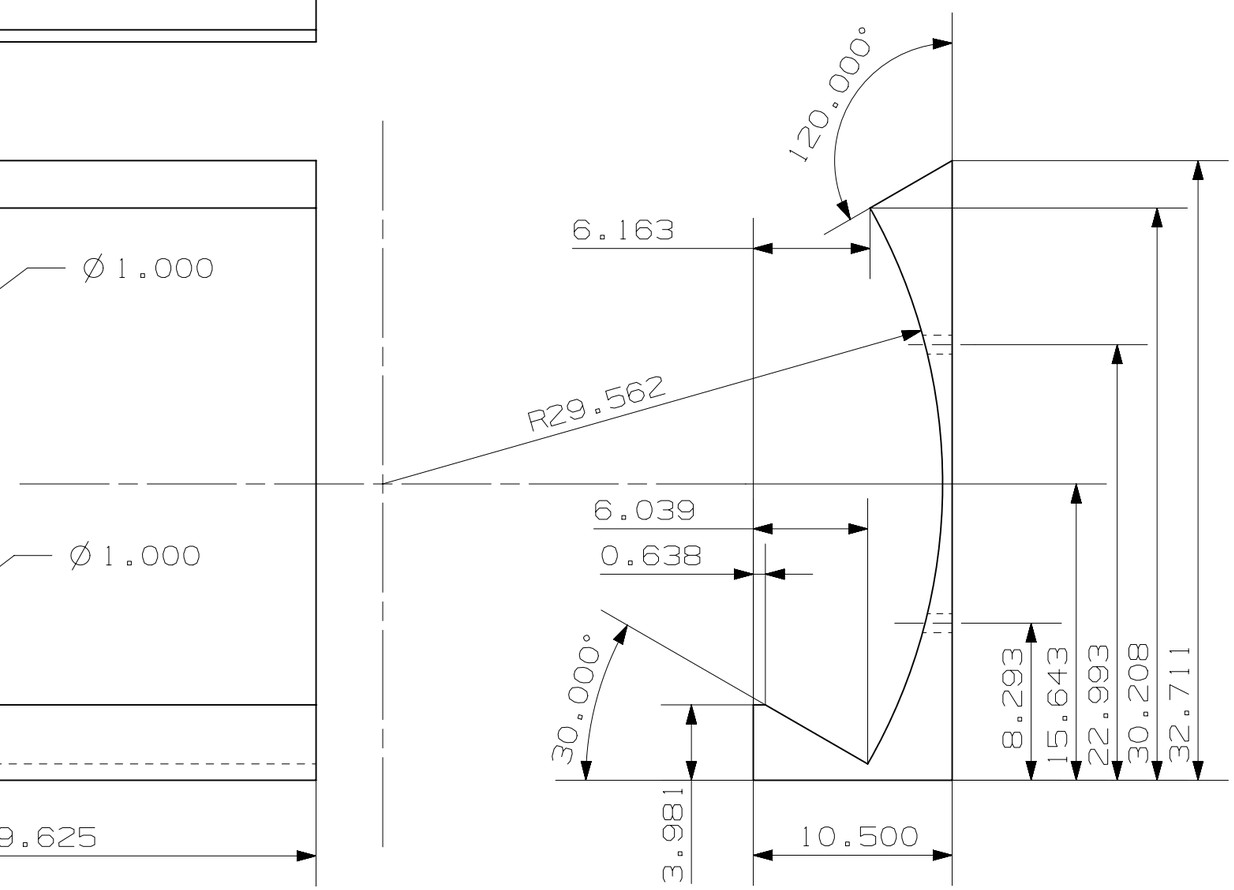

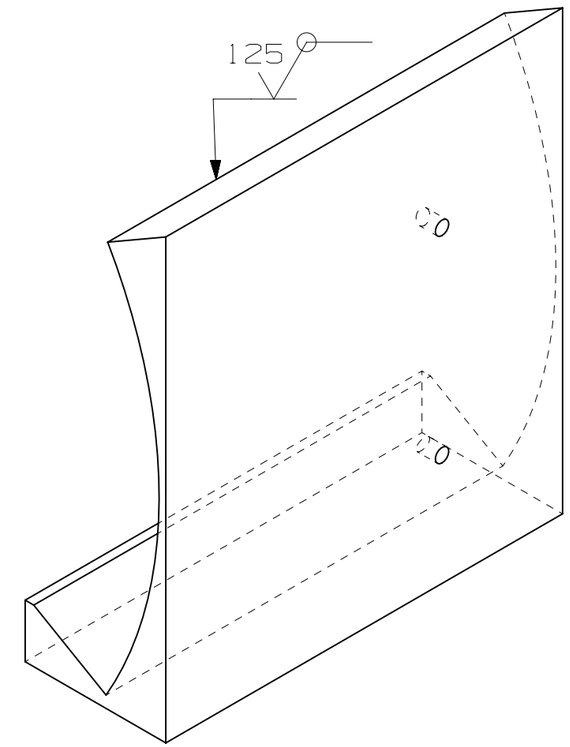

BLOCK IS PERMITTED TO BE AN ASSEMBLY OF SMALLER
LAYERS BONDED TOGETHER WITH AN APPROPRIATE EPOXY

ALL DIMENSIONS IN INCHES
TOLERANCES: ±0.005"
±0.1°

ALL HOLES THROUGH AND SMOOTH BORE

Oregon State UNIVERSITY		HIGH TEMPERATURE TEST FACILITY OREGON STATE UNIVERSITY NUCLEAR ENGINEERING DEPARTMENT CORVALLIS, OR 97331
DATE	01/30/2012	TITLE PSR MOLD- OUTER PLATE
DRAWN BY	CADELL	
REVIEWED BY	J	
APPROVED BY	W	SIZE B · DRG NO. PSR_Mold_Outside_Plate_dwg · REV A
MATERIAL	UHMW	SCALE 1:8 · SHEET 1 OF 1