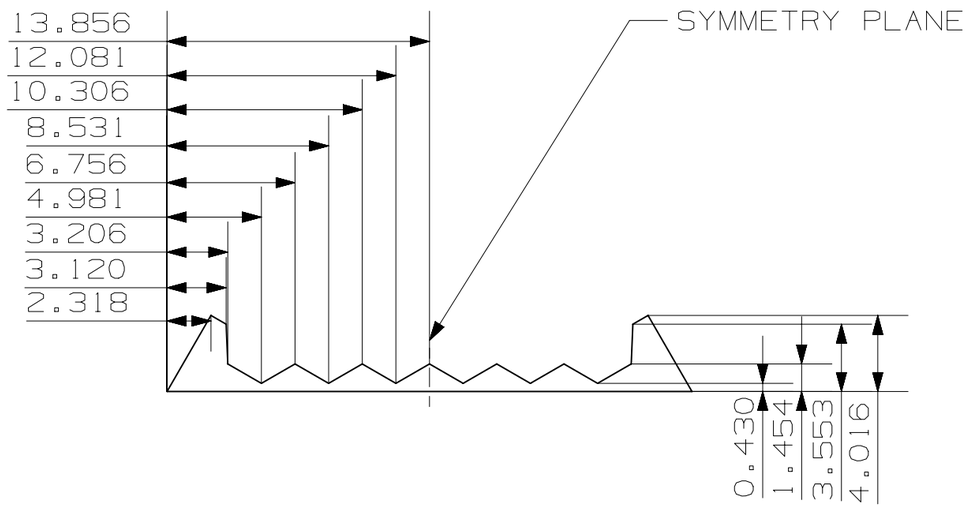

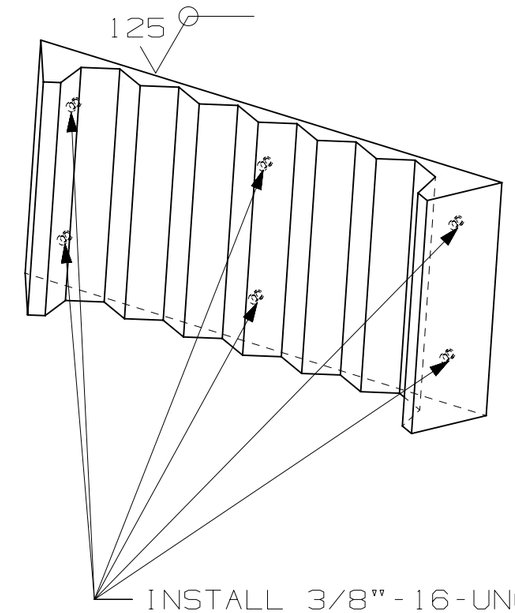

INSTALL 3/8"-16-UNC THREADED INSERT
MCMASTER CARR #90240A003
6 LOCATIONS

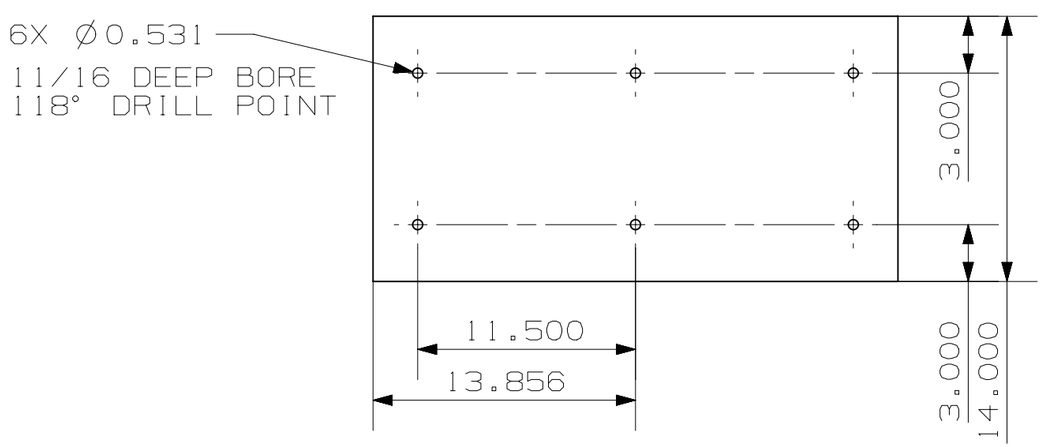

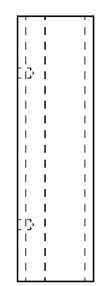

ALL DIMENSIONS IN INCHES
TOLERANCES: ±0.005"
±0.1°

UNLESS SPECIFIED ALL CORNERS R0.0625" MAXIMUM

Oregon State UNIVERSITY		HIGH TEMPERATURE TEST FACILITY OREGON STATE UNIVERSITY NUCLEAR ENGINEERING DEPARTMENT CORVALLIS, OR 97331	
DATE	02/17/2012	TITLE CB MOLD- EDGE PLAIN	
DRAWN BY	CADELL		
REVIEWED BY	J		
APPROVED BY	W	SIZE B / DRG NO. CB_Mold_Edge_Plain_Dwg	REV A
MATERIAL	UHMW	SCALE 1:8	SHEET 1 OF 1